National Patron Members

2020

National Members

SAIMC PROGRESS BY CONTROL

ABB

Adroit Technologies

Afrilek

ALLPRONIX

BECKHOFF

bürkert FLUID CONTROL SYSTEMS

cobots

elonics

EMERSON

Endress+Hauser People for Process Automation

ePLAN

EXTECH Safety Systems

FESTO

ifm electronic

SOUTH AFRICAN INSTRUMENTATION & CONTROL TECHnews YOUR MEDIA PARTNER

instrotech A Contec Group Company

KROHNE

LAPP

LOADTECH LOAD CELLS

metso Expect results

OMRON

PEPPERL+FUCHS

PHOENIX CONTACT INSPIRING INNOVATIONS

RJCONNECT innovative connectivity

Rockwell Automation

Schneider Electric

Shorrock Automation

SICK Sensor Intelligence.

SIEMENS Ingenuity for life

STAHL THE STRONGEST LINK

ESACO (PTY) LTD

The Expert

Swagelok

TEMPERATURE CONTROLS www.tempcon.co.za sales@tempcon.co.za

Valve & Automation Total Valve & Control Solutions

VEGA

WIKA Part of your business

YOKOGAWA

WIKA
Part of your business

Out with the Old in with the New or Not?

Presented By: Sagadevan M. Kanniappen

What is flow measurement?

Flow is the quantification of bulk fluid movement from point A to point B.

Why is the quantification of bulk fluid movement important ?

There are two main categories that are affected by flow measurement

- **Profit**
- **Control and Optimization**

Profit	Control and Optimization
Movement of product – this needs to be accurate to avoid losses.	Product Quality – accurate control ensures consistent product.
Reduced energy consumption lowers operating costs and increases profits.	Optimization results in more efficient process loops reducing wasted energy and minimising losses.

How is flow measured?

There are various methods to measure flow in a pipeline, duct or channel, some of the more common methods are mentioned below:

- **Differential Pressure using primary flow elements**
- **Vortex**
- **Coriolis**
- **Electromagnetic**
- **Ultrasonic**
- **Thermal Mass**
- **Positive Displacement**
- **Turbine**

Primary Flow Elements

Primary Flow elements can be divided further into two sub-categories:

- **Restriction Elements**
- **Constriction Elements**

Restriction – to limit something.

Constriction – the narrowing of something

This is the basis of which primary flow elements are designed.

Types of Primary Flow Elements

Type
Orifice Plates
Meter Runs
Flow Nozzle
Pitot Tube / Averaging Pitot Tube
Cone Flow Meter
Venturi Tubes
Wedge Flow Meter

Wedge Flow meter

The Wedge flow meter consists of a flow body with a Wedge (“V-shaped”) throttle restriction. This restriction creates a DP before and after Wedge which is proportional to the square of the volumetric flow rate. The Wedge flowmeter is suitable for nearly all types of flow, especially for media with a very low Reynolds number of 300 up to very high Reynolds numbers of several million.

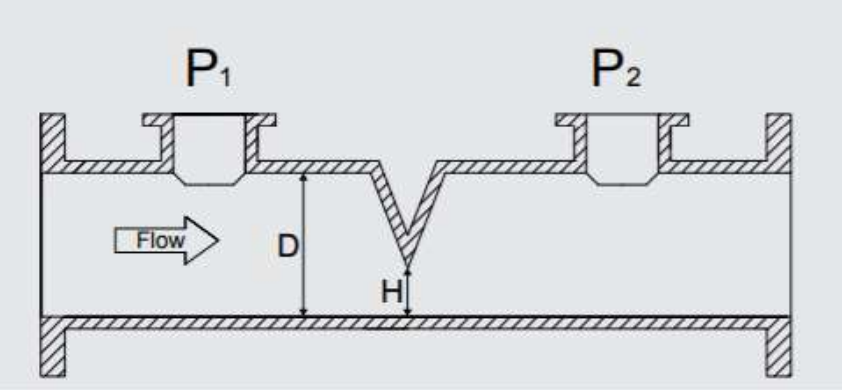

Wedge flow meter, model FLC-WG

Cone Flow Meter

The cone flow meter belongs to the differential pressure flow meters. The Cone meter accelerates the flow to the outside of the pipe by having a cone positioned pointing up the center line of the on coming flow. The pressure drop is be obtained across the interface of two cone frustums (differential producer) via an internal port-way system.

Cone flow meter, model FLC-FC

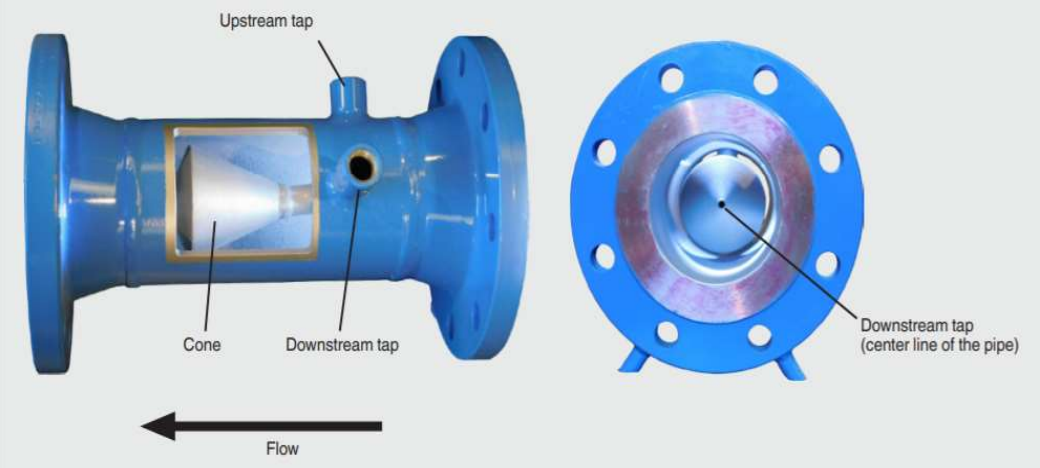

Flow Nozzle

The design of the flow nozzle is based on Bernoulli's equation and consists of a convergent section with a rounded profile and a cylindrical throat. Due to its rigidity the flow nozzle is dimensionally more stable at higher temperature and flow rate than an orifice. The flow nozzle is generally used for measuring the flow of steam as well as non-viscous, erosive and high-velocity media. They can be used in a wide variety of applications that include steam, air, water, vapour, gas, chemical substances and high temperatures.

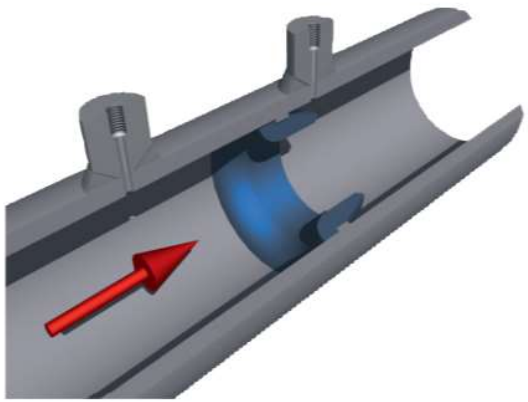

Flow nozzle for in-pipe installation, model FLC-FN-PIP

Flow nozzle for flange assembly, model FLC-FN-FLN

Venturi nozzle, model FLC-FN-VN

Venturi Tube

Venturi tubes are reliable, easy to use and low-maintenance Venturi tubes are particularly suitable for the measurement of clean liquids and gases. At the upstream side, the instrument consists of a gradually decreasing nozzle, through which the medium in a pipe is accelerated. The downstream side is a gradually increasing diffuser section, which enables a high pressure recovery.

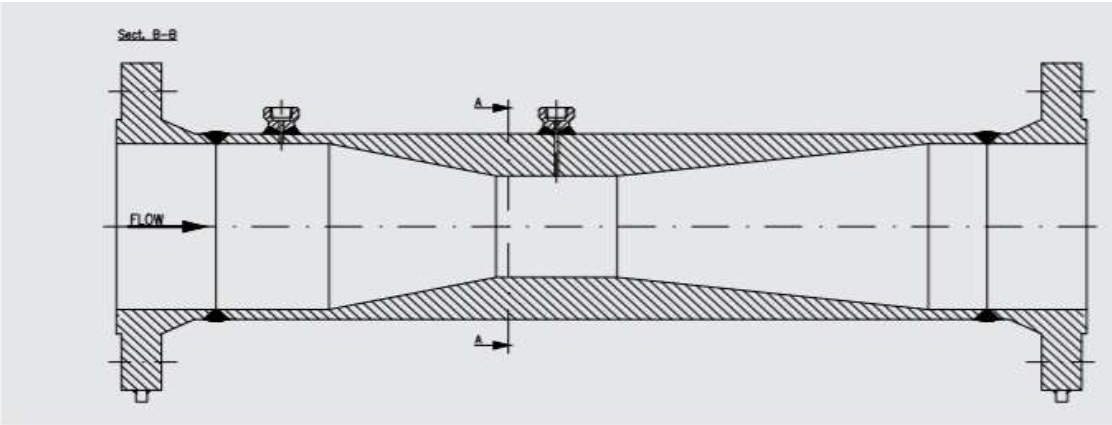

Fig. top: From bar stock
Fig. bottom: From welded sheet

Averaging Pitot Tube

An Averaging Pitot Tube consists of a sensor bar with multiple annular inserts. This sensor bar is inserted across the cross-section of a pipe or duct. When fluid impacts the upstream side of the sensor bar it creates a pressure which is higher than the static pressure of the pipe or duct. On the downstream side of the sensor bar the pressure is below the pipe or ducts static pressure. A differential pressure transmitter is then used to measure the difference between the high pressure and low pressure sides of the sensor bar and relates this to the flow-rate.

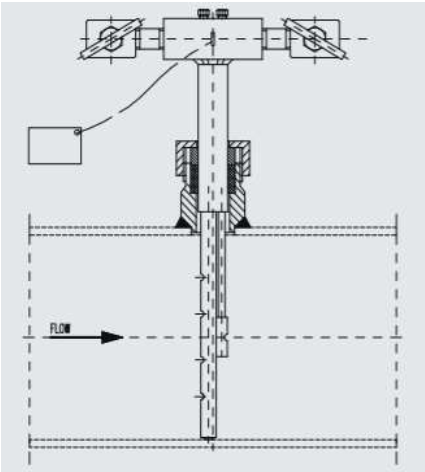

Pitot tubes
Fig. left: Extractable, model FLC-APT-E
Fig. right: Fixed, model FLC-APT-F

Orifice Plates

Orifice plates are the simplest type of primary flow elements. Their bore diameter is calculated to generate the specified differential pressure at full scale flow rate.

Orifice plate, model FLC-OP

Orifice flange, model FLC-FL

Annular chamber, model FLC-AC

Types of Orifice plates

Square edge orifice plate	*This design is intended for general applications in clean media and gases*	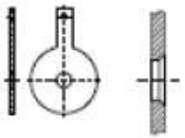
Quarter circle and conical entrance orifice plate	*They are the best choice for the measurement of liquids with a low Reynolds number*	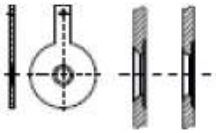
Eccentric orifice plate	*For measurement with two-phase, dirty and particle-laden media. However, for small pipe diameters an eccentric orifice plate is a better solution than a segmental orifice plate.*	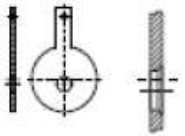
Segmental orifice plate	*For measurement with two-phase, dirty and particle-laden media*	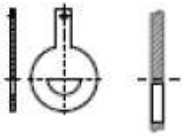

Orifice Plates

		Orifice Plate and relative assemblies (Orifice Flanges / Meter Run / Annular Chambers)		
		Square edge	Quadrant / Conical Entrance	Eccentric / Segmental
Gas	Clean	🟢	🔴	🟡
	Dirty	🔴	🔴	🟢
Liquids	Clean	🟢	🟢	🟡
	Viscous	🔴	🟢	🔴
	Dirty	🟡	🟡	🟢
	Corrosive	🟡	🟡	🟡
Steam		🟡	🟡	🟡
Accuracy		± 0,5÷0,8 %	± 2,0 %	± 2,0 %

🟢 = Prefered
🟡 = Suitable
🔴 = not Suitable

Orifice vent and drain holes

- Depending on the medium a drain or vent hole may be required
  - ***Drain hole:*** *Drain hole is a small hole which is provided in the lower region of orifice plate. Drain hole is required in gas flow service where liquid entrainment may occur.*

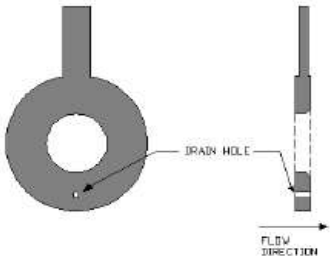

  - ***Vent hole:*** *Vent hole is a small hole which is provided in the upper region of orifice plate. Vent hole is required in liquid flow service where gas entrainment may occur.*

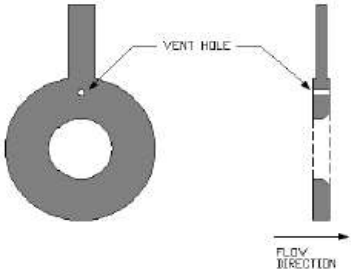

Meter Run Assemblies

A meter run is an assembly consisting of an orifice plate with flanges and calibrated upstream and downstream pipes. Since the meter run is manufactured as one unit, it is possible to optimally match all components with each other. Thus any faults that might lead to measuring inaccuracies can be avoided.

Length rule
The illustration shows the standards relating to the length of upstream and downstream pipes.

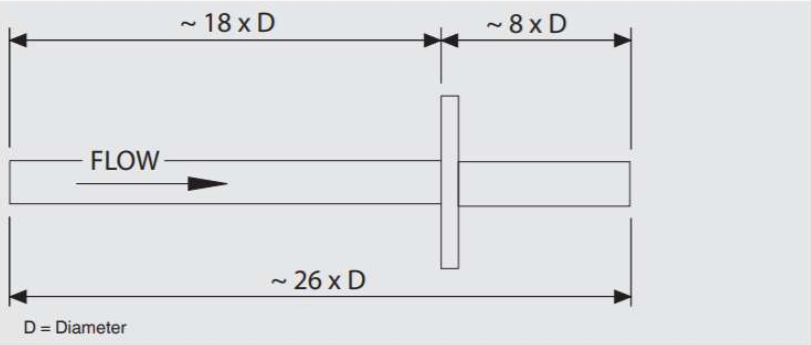

Standard meter run, model FLC-MR-STD

Applications of Primary Flow Elements

Type	Industries	Advantages	Disadvantages	Accuracy	Repeatability
Orifice Plate Orifice plate, model FLC-OP	• Power Generation • Oil and Gas • Petrochem • Chemical • Water	• Low Cost • Easy Installation • Custom Engineered	• High permanent pressure drop.	• +/- 0.5%	0.1%
Meter Run Meter run, model FLC-MR	• Power Generation • Oil and Gas • Petrochem • Chemical • Water	• Easy Installation • Custom Engineered	• High permanent pressure drop, but lower than orifice.	• +/- 0.5%	0.1%

Applications of Primary Flow Elements

Type	Industries	Advantage	Disadvantage	Accuracy	Repeatability
Flow Nozzle Flow nozzle for in-pipe installation, model FLC-FN-PIP	• Power Generation • Oil and Gas • Petrochem • Chemical • Water	• Suitable for high temperature applications • High Accuracy	• Not suitable for viscous media	• +/- 0.25%	• 0.1%
Pitot Tube Pitot tubes Fig. left: Extractable, model FLC-APT-E Fig. right: Fixed, model FLC-APT-F	• Oil and Gas • Petrochem • Chemical • Water	• Low permanent pressure loss • Custom installation configuration	• Blockage of Annular inserts	• +/- 2%	• 0.1%

Applications of Primary Flow Elements

Type	Industries	Advantage	Disadvantage	Accuracy	Repeatability
Cone Cone flow meter, model FLC-FC	• Power Generation • Oil and Gas • Petrochem • Chemical • Mining	• Short upstream and downstream piping • Low cost	• Not suitable for highly viscous fluids	+/- 0.5%	0.1%
Venturi Fig. top: From bar stock Fig. bottom: From welded sheet	• Power Generation • Oil and Gas • Petrochem • Chemical • Water	• Short upstream and downstream piping • High pressure recovery	• Not suitable for dirty liquids and gases	+/- 0.5%	0.1%

Applications of Primary Flow Elements

Type	Industries	Advantage	Disadvantage	Accuracy	Repeatability
Wedge Wedge flow meter, model FLC-WG	• Mining • Petrochem • Chemical • Oil and Gas • Pulp and Paper	• Suitable for highly viscous media • Low maintenance	• Upstream and Downstream	• +/- 5% but can be calibrated down to 0.25%	• 0.2%

Differential Pressure and the relationship to Flow Rate

The concepts used in differential pressure (DP) flow theory and calculations originate mainly from two specific areas of fluid mechanics:

- **Fluid kinematics – study of fluid in motion**
- **Fluid dynamics – study of the effects of forces due to fluid motion (Hydrodynamics)**

Therefore its important to understand the behaviour of fluids.

Flow Characteristics

Fluids can flow in two profiles:

- **Laminar – flow in one uniform direction**
- **Turbulent – flow in multiple directions**

Fluids can be either:

- **Compressible – gases**
- **Incompressible – liquids**

Fluids can be either:

- **Viscous – pours slowly**
- **Non-viscous – pours easily**

Data required for DP flow measurement

WIKA
Part of your business

D = pipe ∅

d = bore ∅

F_c = fluid characteristics

Q = flow rate (FS & Normal)

ΔP = Delta Pressure generated

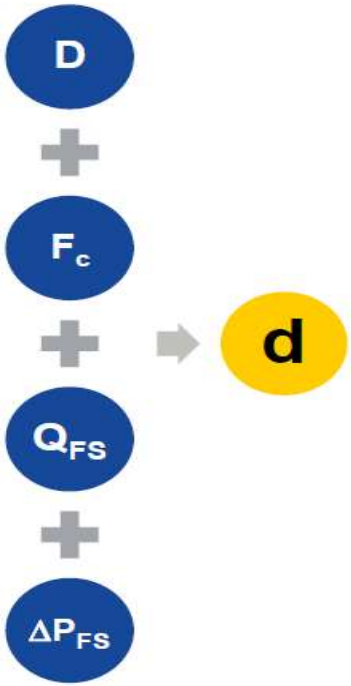

Reynolds Number

Reynolds number is defined as a non-dimensional parameter used in fluid mechanics.

The Reynolds number is the ratio of the inertial force of a fluid to the viscous force.

$$RD = \frac{\rho D \bar{V}}{\mu}$$

Where:

- ρ = Fluid density
- D = Pipe diameter
- $\bar{V}$ = Average fluid velocity
- μ = Absolute (dynamic) velocity of the fluid

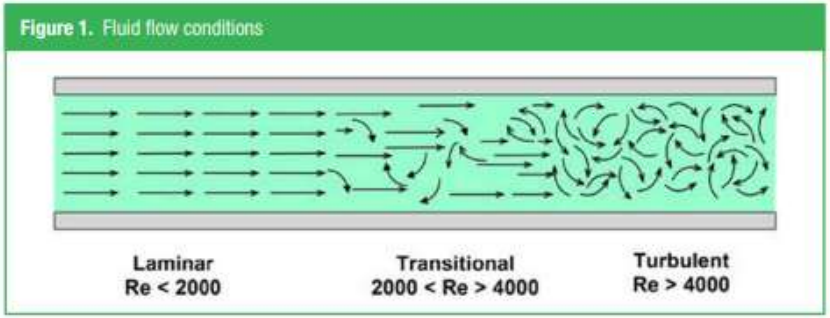

Laminar vs Turbulent Flow

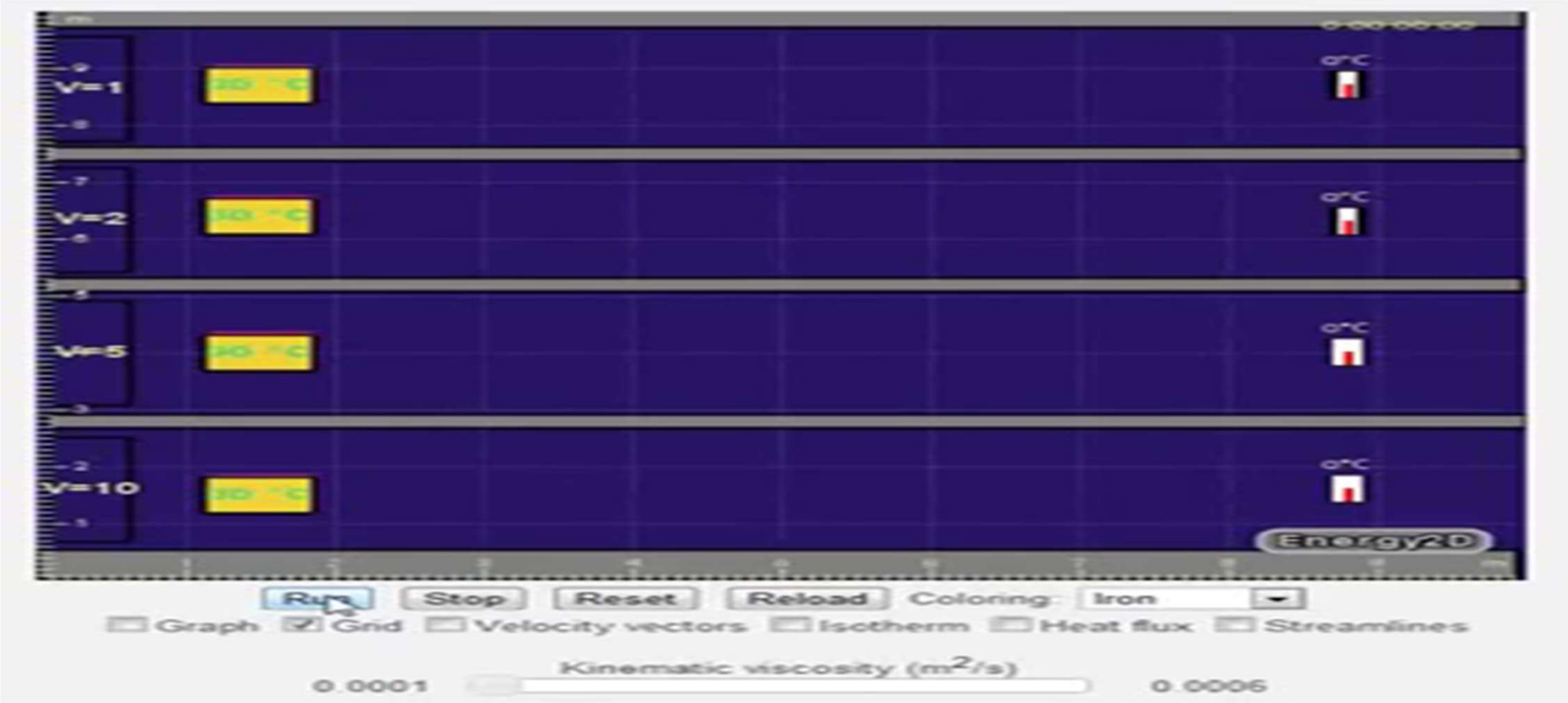

Beta Ratio

The Beta-ratio is the ratio of the diameter of the orifice or throat of the primary device to the internal diameter of the measuring pipe upstream.

$$\beta = \frac{d}{D}$$

Where:

- β = ratio of the diameter between the device bore or throat to the internal diameter of the measuring pipe upstream.
- d = diameter of device bore or throat
- D = diameter of measuring pipe upstream

Pressure Loss

As we know any intrusion or bend in a pipe line induces a pressure loss.

For example: Consider the piping extract below

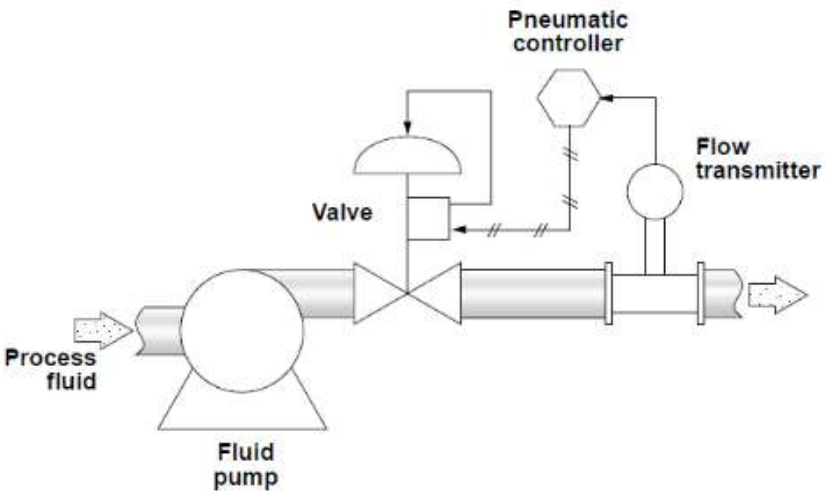

Pressure Loss

With reference to the piping extract, we can conclude that:

- **Pnet = Ppump – Pvalve – Pflowmeter**
- **The permanent pressure loss due to the flowmeter requires the pump to draw more energy to maintain a desired flow rate**
- **However choosing the correct instrument with the pressure loss that suits your process is important.**

Permanent pressure loss

Although down stream straight pipe runs ensure pressure recovery not all of the pressure is recovered.

Permanent pressure loss with respect to primary flow elements is pressure that is lost due to the restriction.

This pressure is usually a percentage of the generated DP across that restriction.

Permanent Pressure Loss Continued

- If a fluid is forced to pass through a restricted area, its velocity increases. But overall energy must remain the same ⇨ pressure drops.
- Through the bore, the velocity increases quickly and the pressure decreases to its minimum value (vena contracta).
- After the vena contracta, pressure increases & velocity decreases to its initial value; pressure does not recover its initial value.

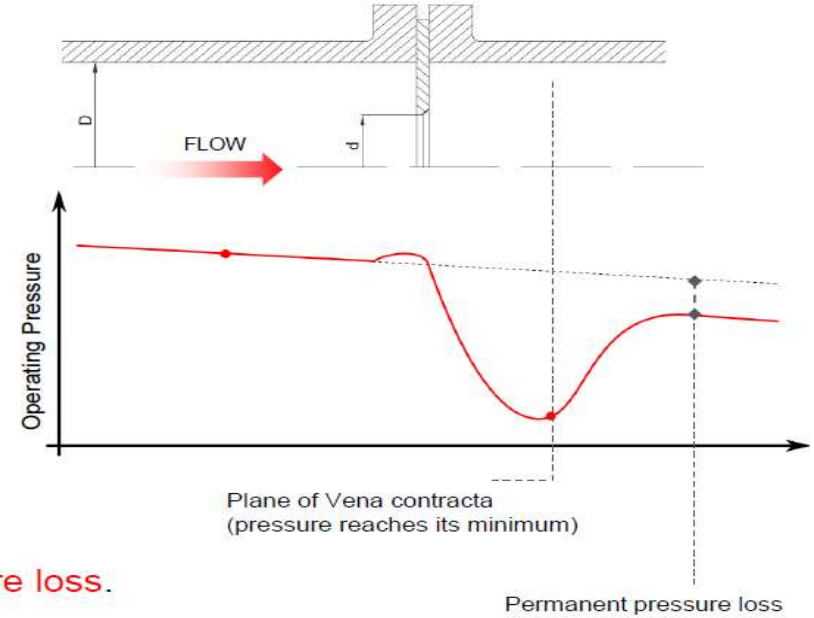

This difference is known as permanent pressure loss.

Permanent Pressure loss continued

Flow Meter Type
Coriolis
Orifice Plate / Nozzle
Turbine
Vortex
Venturi Tube
Averaging Pitot Tube
Magflow (In-line) /Ultrasonic (minimal)

Highest PPL

Lowest PPL

Pressure loss due to a primary flow element

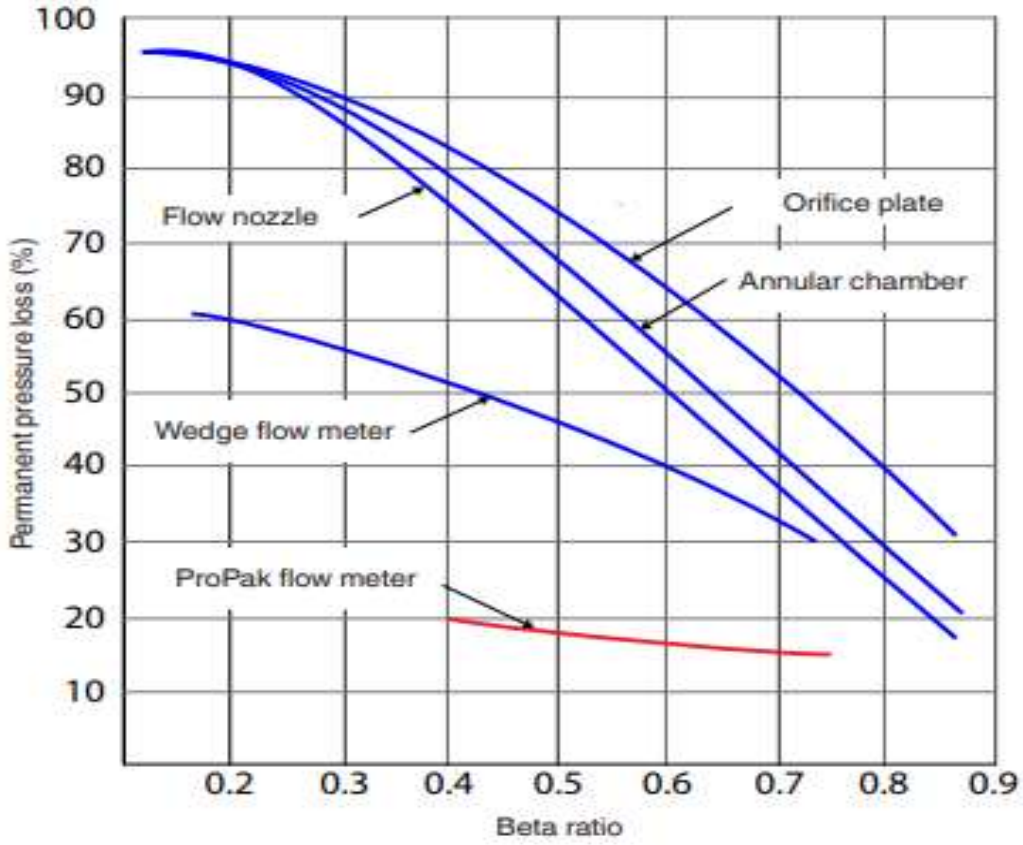

HHR Propak – combination of flow technology

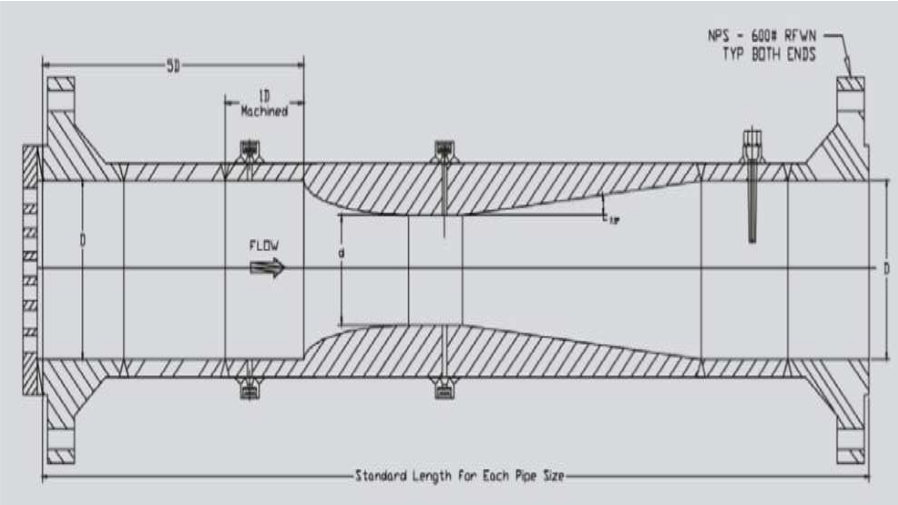

Applications

- Custody transfer measurements per API 22.2
- Oil production and refining
- Power generation
- Gas processing and transport, LNG, FLNG
- Chemical and petrochemical industries

Special features

- No need for straight upstream and downstream pipes
- Highest accuracy
- Energy-efficient
- Flexible installation
- Wide variety of applications

ProPak flow meter, model FLC-HHR-PP

Process Optimisation Example – Flow meters

Note…. values are arbitrary, for concept illustration purposes only.

Energy

Energy savings yield greater economic rewards for the end-user and ultimately result in less strain on our environment.

Maximum Permissible Pressure Loss - MPPL

The MPPL of a process line can be defined as:

The upper limit in pressure loss permitted by a process line before standard/casual operation is altered.

Where:

$$\mathbf{Pnet = Psource - (\sum Ploss_N)}$$

Pnet = Total line pressure – this is often a setpoint value to the source of pressure.

Psource = Primary supply pressure

Ploss = pressure losses induced by instrumentation or piping

N = number of pressure losses

MPPL vs Operating Costs

Once the Pressure Loss > MPPL the process line is no longer declared as optimised or efficient and the result is an increase in operating costs and a decrease in profit.

Three Cases:

1. $\sum \mathrm{Ploss_N}$ **< MPPL - Optimised**
2. $\sum \mathrm{Ploss_N}$ **= MPPL - Efficient**
3. $\sum \mathrm{Ploss_N}$ **> MPPL - Costly**

Case Study

Consider the following scenario,

Process: Steam header fed from a coal-fired boiler, flowmeter has been replaced without PPL exercise.

Variable	Value
Steam Pressure @ (100% FRD)	50 bar
Turbine Output @ (100% FRD)	500MW
Fuel: Pulverized Coal	R8.00 per m3
Fuel usage @ (100% FRD)	150 m3 per second
Fuel vs Steam Pressure	3 m3 per second = 1bar
Pressure loss due to piping	0.8 bar
Pressure loss due to flow element	0.25 bar
MPPL	1 bar

Analysis

This is a case 3 scenario, $\sum \mathrm{Ploss_N}$ > MPPL – Costly

Applying the formula,

Pnet = Psource - $(\sum \mathrm{Ploss_N}) =$ 50bar – (0,8bar + 0,25bar) = 48,95bar

MPPL(maximum permissible pressure loss) = 1bar

CNPL(current net pressure loss) = 1,05bar

Fuel vs Pressure Cost, 0,05bar = 0,15m3/per second of pulverised coal

Fuel cost = 0,15m3 x R8,00 = R1,20 per second, R72,00 per hour, R1728,00 per day, R12096,00 per 7 day week, R51840,00 per 30 day month, R622080,00 per year.

Extra Coal = R622080,00 per year for a 0,05bar unwanted pressure loss.

Global Standards

- ISO-5167
- ISO TR 15377 – conditions outside the scope of ISO 5167
- ASME MFC – American standard measurement of fluid flow in closed conduits
- ASME PTC 6 – American Standard for steam turbines
- BS 1042 – British standard measurement of fluid flow in closed conduits
- DIN 19206 – Orifice plates for insertion between flanges

….to recap

- **There are various instruments for flow measurement available in industry today.**
- **Primary flow elements can be used in a variety of applications.**
- **Each application should be individually assessed to ensure the correct flow meter is selected.**
- **In performing this assessment comprehensive process and piping data should be carefully analyzed.**
- **Pressure loss in a system results in increased expenses, correct flowmeter selection can assist in minimizing this.**